SENCAN®

Product: Cordless Drill Art. No. D531001

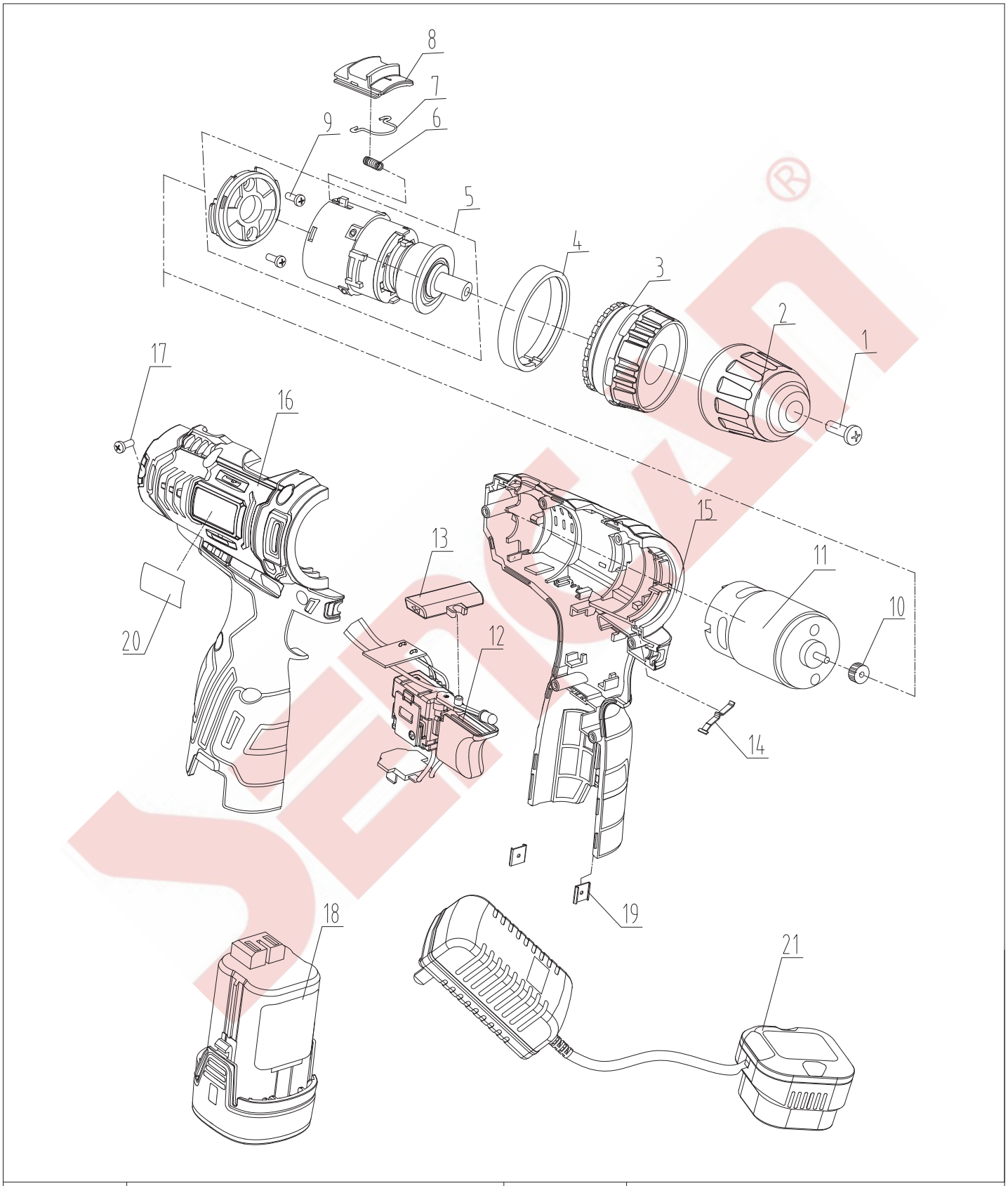

Version No.	D	Enable Time	2022.8

SENCAN®

Product:Cordless Drill Art.No.D531001

No.	Part Name(Chinese)	Part Name(English)	Code	Qty	No.	Part Name(Chinese)	Part Name(English)	Code	Qty
1	螺钉M5×20-LH	Screw M5×20-LH	30201073	1					
2	钻夹头	Chuck	10304001067	1					
3	扭力杯	Torque Adjusting Ring	10101011177	1					
4	装饰圈	Ornament Ring	10101011178	1					
5	变速箱组件	Gear Box Complete	10701015052	1					
6	档位弹簧	Gear push spring	10303001135	1					
7	档位推钮卡簧	Gear push circlip	30303043	1					
8	档位推钮	Gear push button	10101007190	1					
9	带平弹垫螺钉M3×6	Screw M3×6	30201163	2					
10	电机齿轮	Motor Gear	10302004167	1					
11	电机14.4V	Motor14.4V	10608002057	1					
12	开关组件	Switch Assembly	10608002007	1					
13	换向推杆	Reversing Push Rod	10101007188	1					
14	T型弹片	T-Shrapnel	10401003046	1					
15	左机壳	Left Housing	10101002128	1					
16	右机壳	Right Housing	10101002127	1					
17	自攻螺钉ST3×14	Screw ST3×14	30202097	6					
18	LD1415电池包	Bettery	56101122	2					
19	尾卡	Buckle	10401008038	2					
20	铭牌	Name Plate	20302001963	1					
21	CD1415A充电器	Charger	56102043	1					

Version No.	D	Enable Time	2022.8